power

File: power.kicad_sch

RX

File: RX.kicad_sch

TX

File: TX.kicad_sch

IF

File: IF.kicad_sch

Sheet: /
File: V2.kicad_sch

Title:

Size: A4	Date:	**Rev:**
KiCad E.D.A. 10.0.0		Id: 1/5

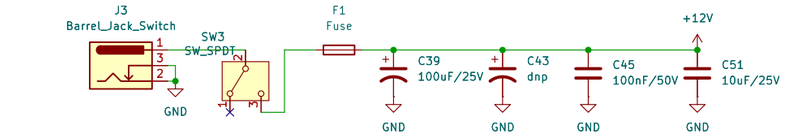

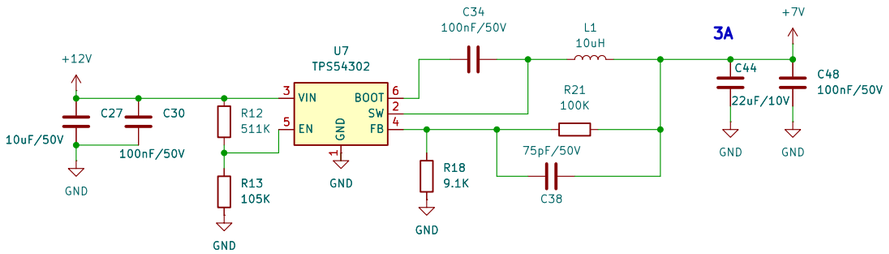

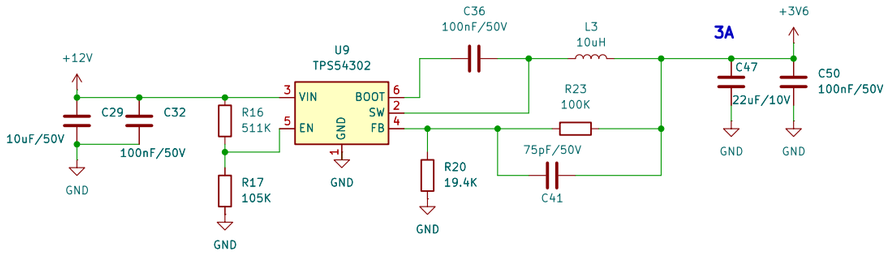

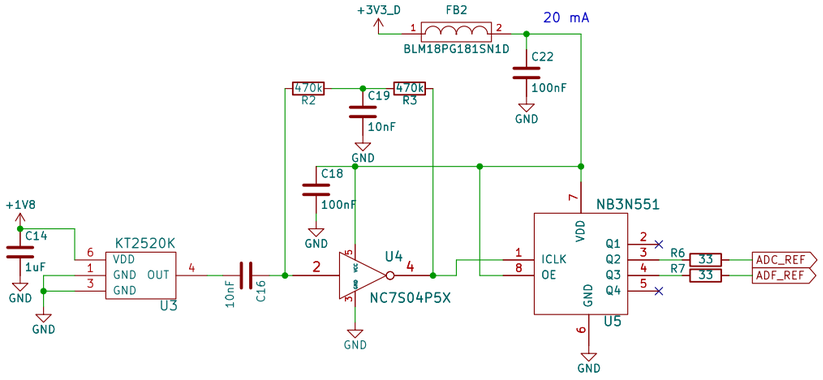

33 Ohms limits the slew rate slightly to avoid noise coupling into the sensitive ADC analog inputs.

KT2520K 48Mhz: Generates a stable frequency but in a low-voltage Clipped Sine format.
NC7S04P5X: Converts that low-voltage signal into a clean Square Wave (CMOS levels).
NB3N551: Takes the clean square wave and distributes it to multiple components with minimal timing error (low skew).

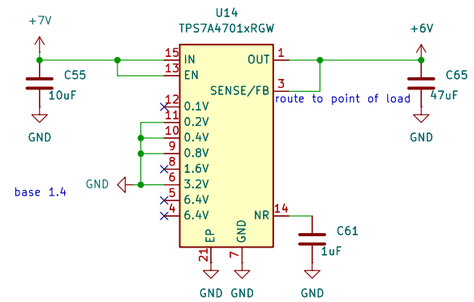

Load: PMA3-14LN+ (PA/LNA) 90mA x 6

5V from Shielded FFC (Flat Flexible Cables): HMC1163 250mA(VCC Pins)

TCXO (Oscillator) 2mA, Fanout 25mA
plus 1v8 50mA

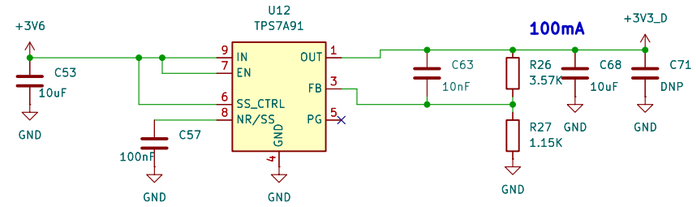

LTC5548 160mAx4, ADF4159 40mA, ADAR7251 115mA(Analog), ADAR7251 40mA(Digital internal LDO)
ADA4940-2 1.25mA x 4

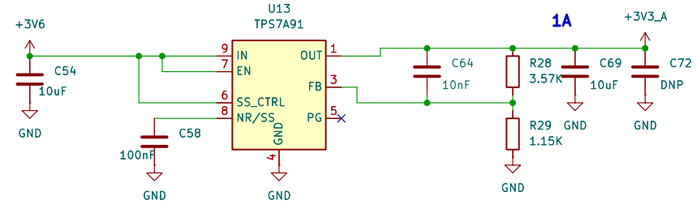

ADF4159 10mA

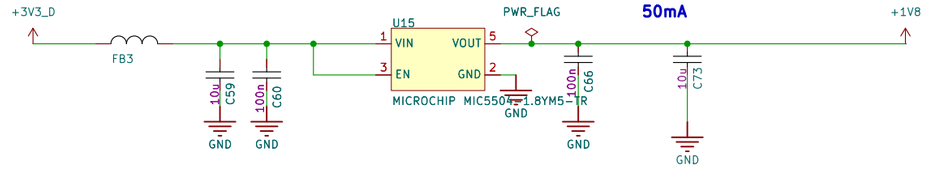

Sheet: /power/
File: power.kicad_sch

Title:

Size: A3	Date:	Rev:
KiCad E.D.A. 10.0.0		Id: 2/5

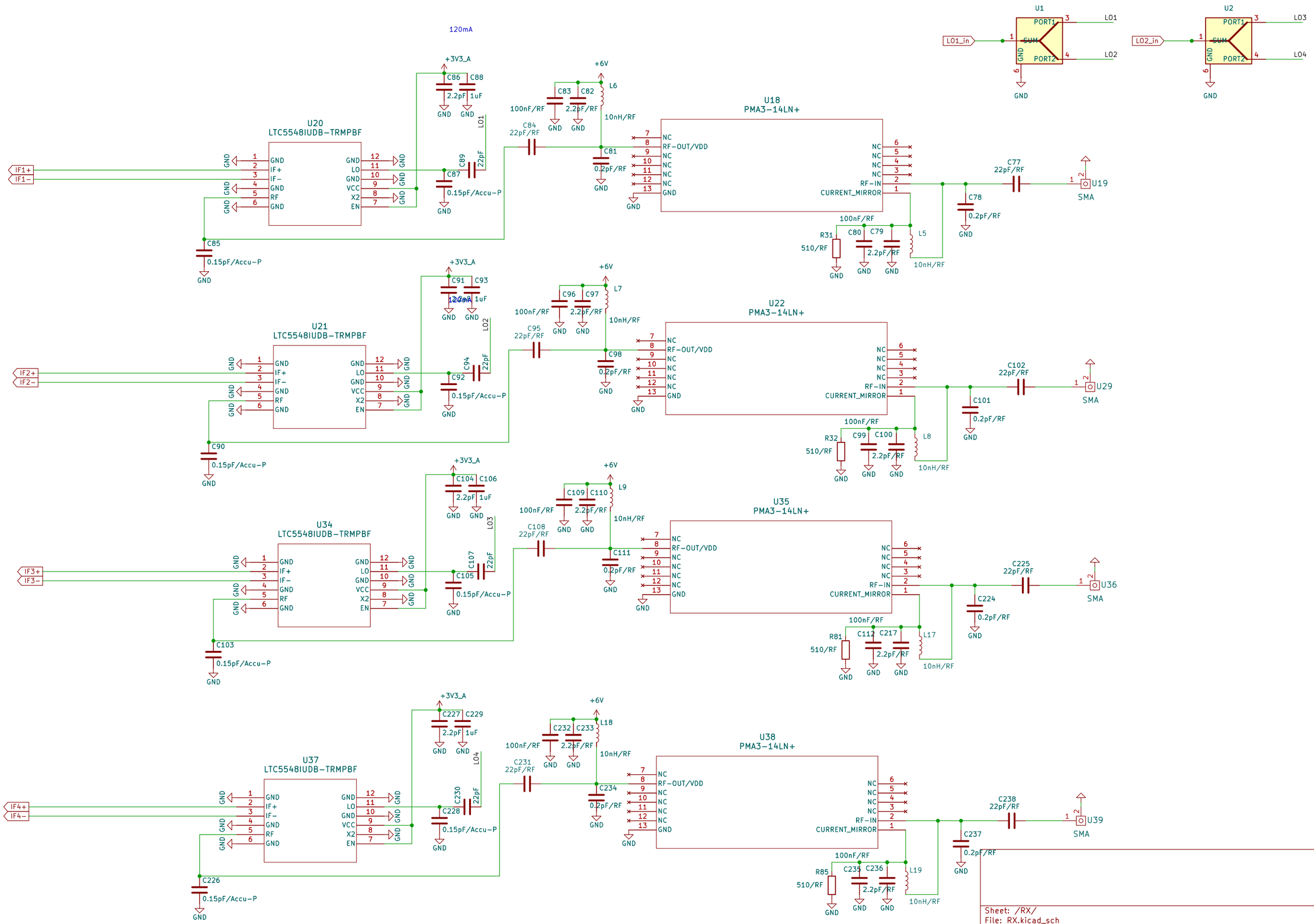
U1
PORT1
SUM
PORT2
GND
LO1_in
LO1
LO2
U2
LO2_in
LO3
LO4
120mA
+3V3_A
+6V
U20
LTC5548IUDB-TRMPBF
IF1+
IF1-
GND
IF+
IF-
RF
LO
VCC
X2
EN
C86
C88
2.2pF
1uF
C83
C82
L6
100nF/RF
10nH/RF
C84
22pF/RF
C81
0.2pF/RF
C87
0.15pF/Accu-P
C89
22pF
C85
U18
PMA3-14LN+
NC
RF-OUT/VDD
RF-IN
CURRENT_MIRROR
C77
C78
U19
SMA
R31
510/RF
C80
C79
L5
U21
IF2+
IF2-
C91
C93
C96
C97
L7
C95
C98
C92
C94
C90
U22
C102
C101
U29
R32
C99
C100
L8
U34
IF3+
IF3-
C104
C106
C109
C110
L9
C108
C111
C105
C107
C103
U35
C225
C224
U36
R81
C112
C217
L17
U37
IF4+
IF4-
C227
C229
C232
C233
L18
C231
C234
C228
C230
C226
U38
C238
C237
U39
R85
C235
C236
L19
Sheet: /RX/
File: RX.kicad_sch
Title:
Size: A3
Date:
Rev:
KiCad E.D.A. 10.0.0
Id: 3/5

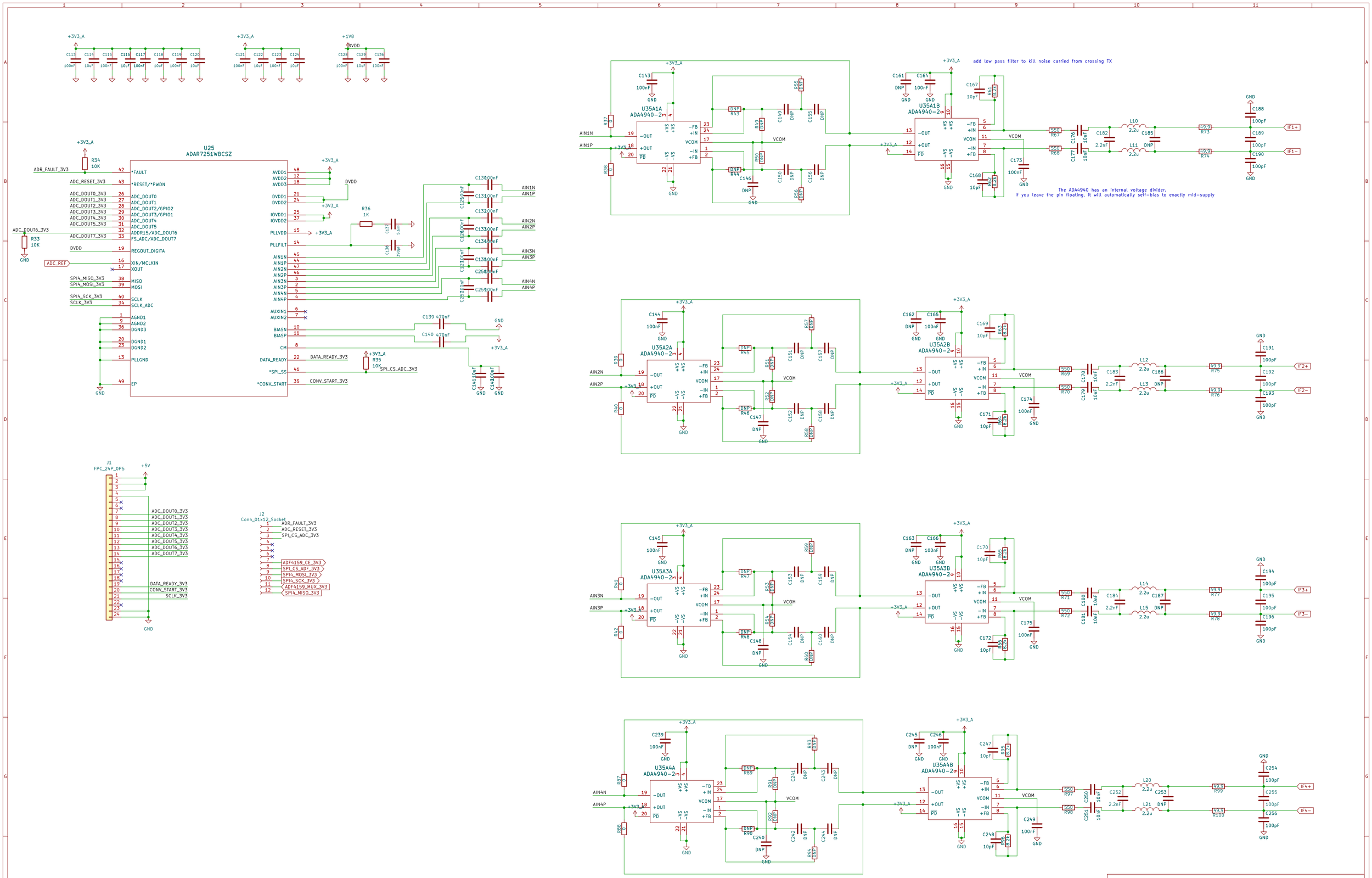

Sheet: /IF/
File: IF.kicad_sch

Title:

Size: A2 | Date: | Rev:
KiCad E.D.A. 10.0.0 | Id: 4/5

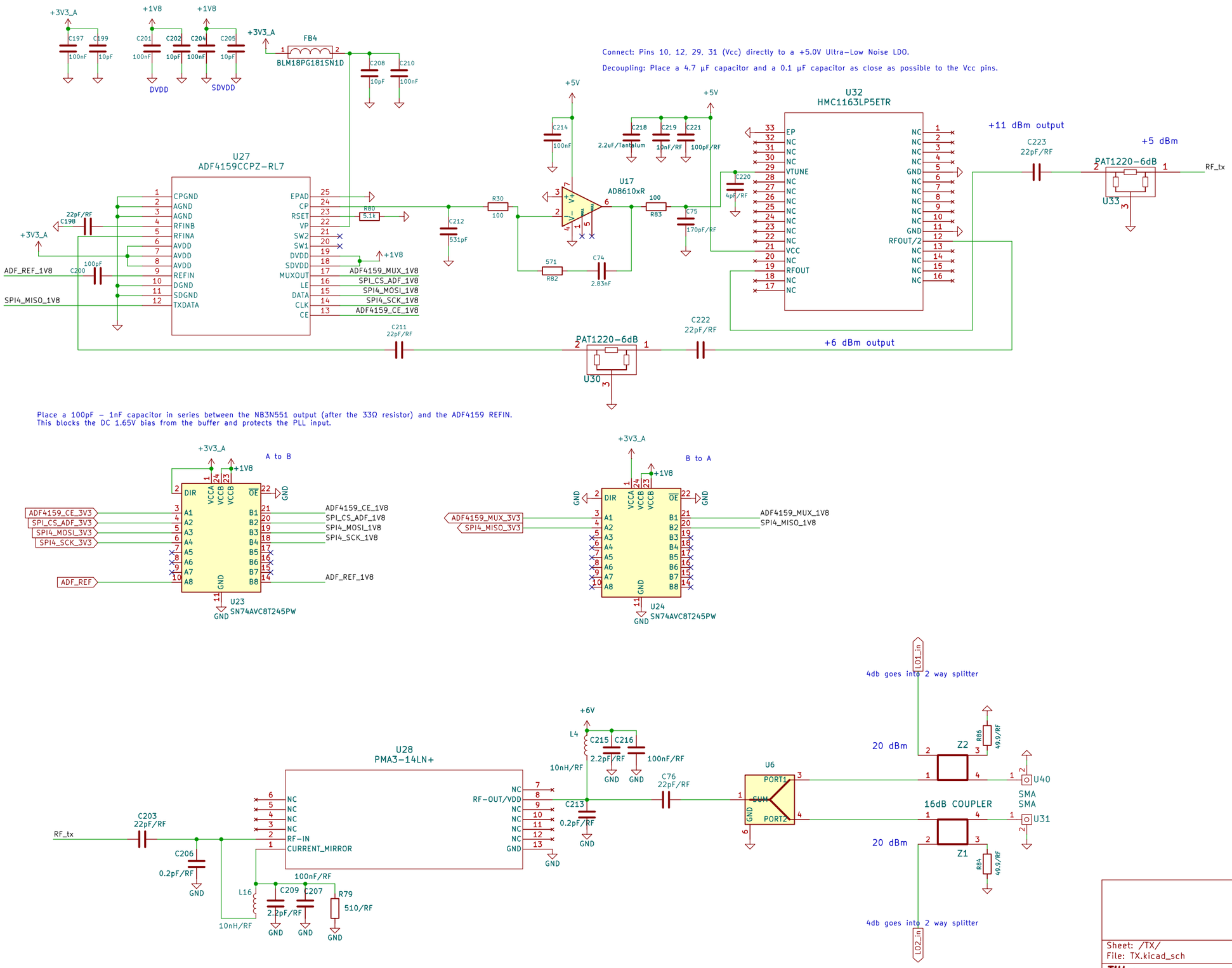

Sheet: /TX/
File: TX.kicad_sch

Title:

Size: A3	Date:	Rev:
KiCad E.D.A. 10.0.0		Id: 5/5